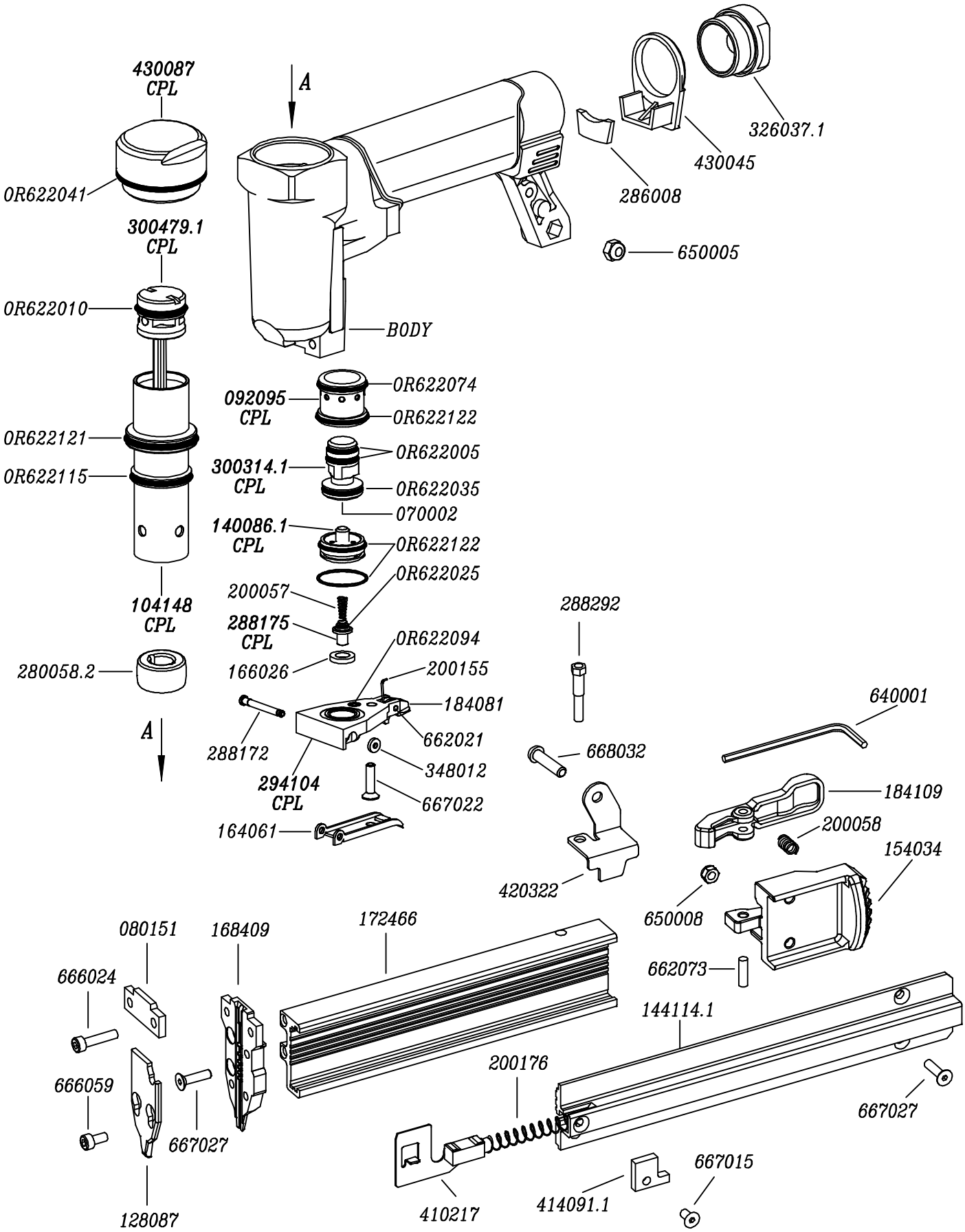ESP 2	MACHINE CODE J010874.04	MACHINE CODE 20874.04	MACHINE CODE 30874.04	MACHINE CODE	MACHINE CODE
DESC.	F1A MB-25 A	R1A MB-25 A	H1A MB-25 A		
BODY	138578	138568	138569