ESP 5	MACHINE CODE 11077	MACHINE CODE 21077	MACHINE CODE 31077	MACHINE CODE	MACHINE CODE
DESC.	F1B 7C-16	R1B 7C-16	H1B 7C-16		
BODY	138579	138574	138576		
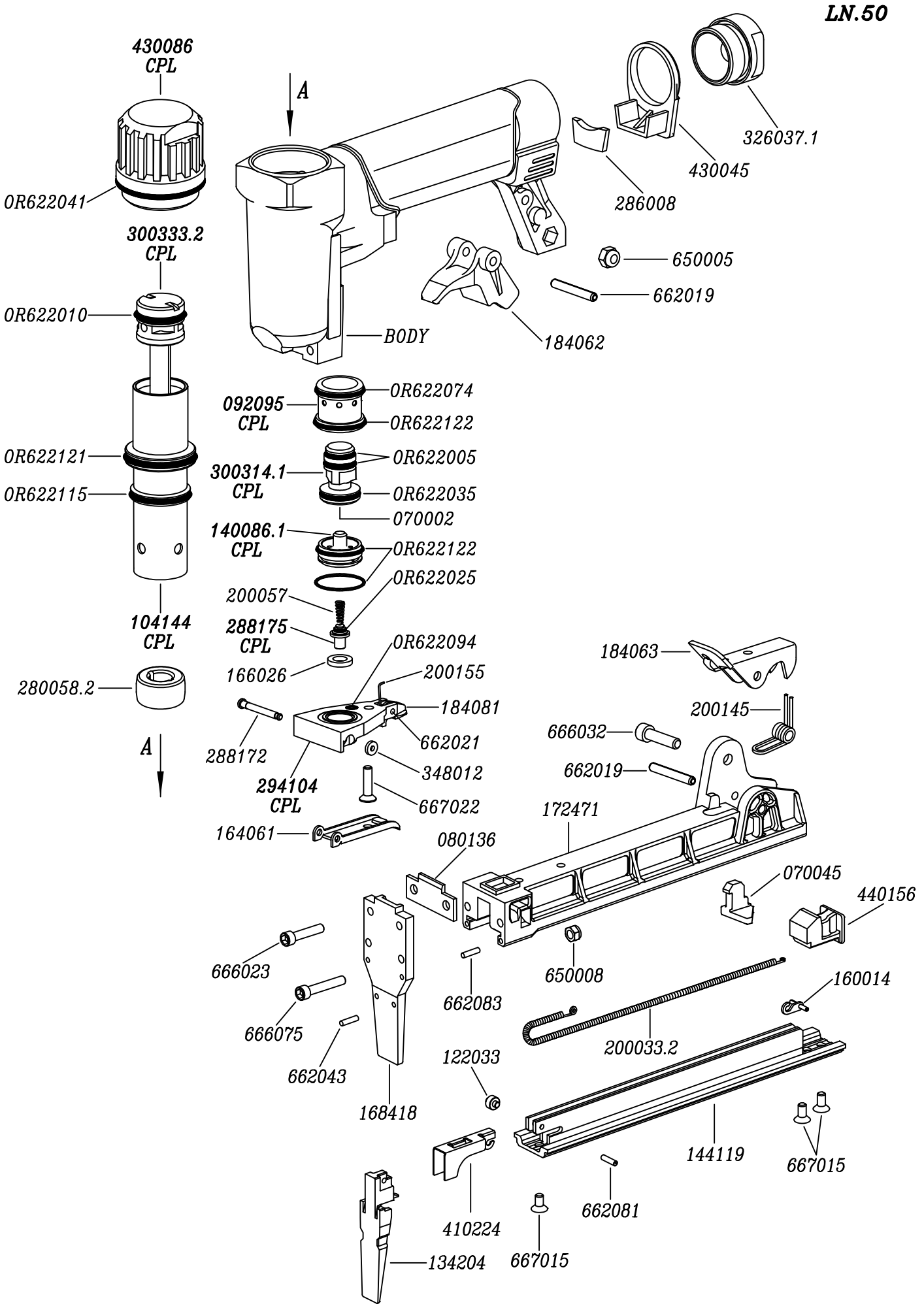
LN.50