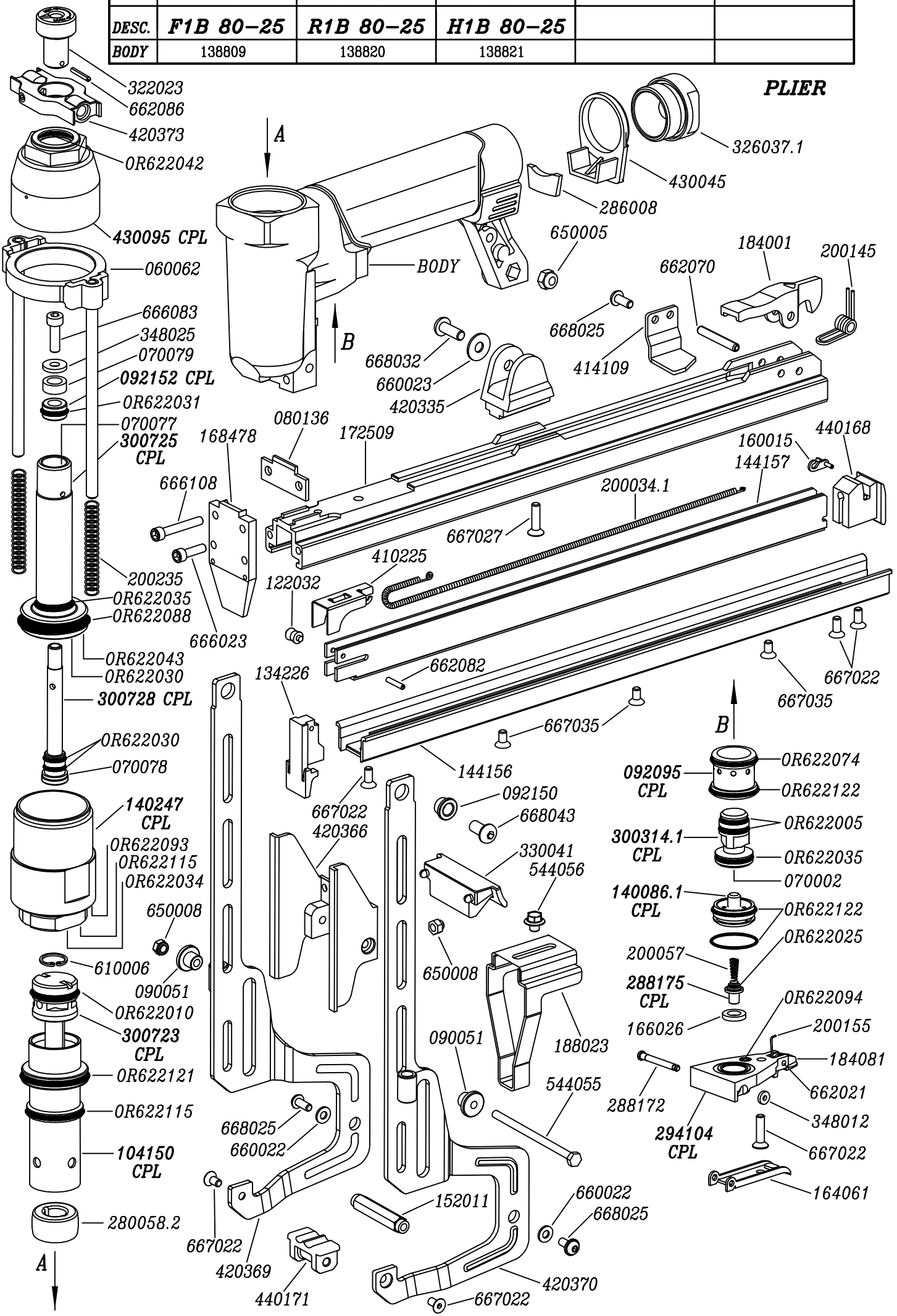ESP	MACHINE CODE	MACHINE CODE	MACHINE CODE	MACHINE CODE	MACHINE CODE
0	11194	21194	31194		
DESC.	F1B 80-25	R1B 80-25	H1B 80-25		
BODY	138809	138820	138821