ESP	MACHINE CODE	MACHINE CODE	MACHINE CODE	MACHINE CODE	MACHINE CODE
0	11158				
DESC.	F21P 90-25A				
BODY	138638				
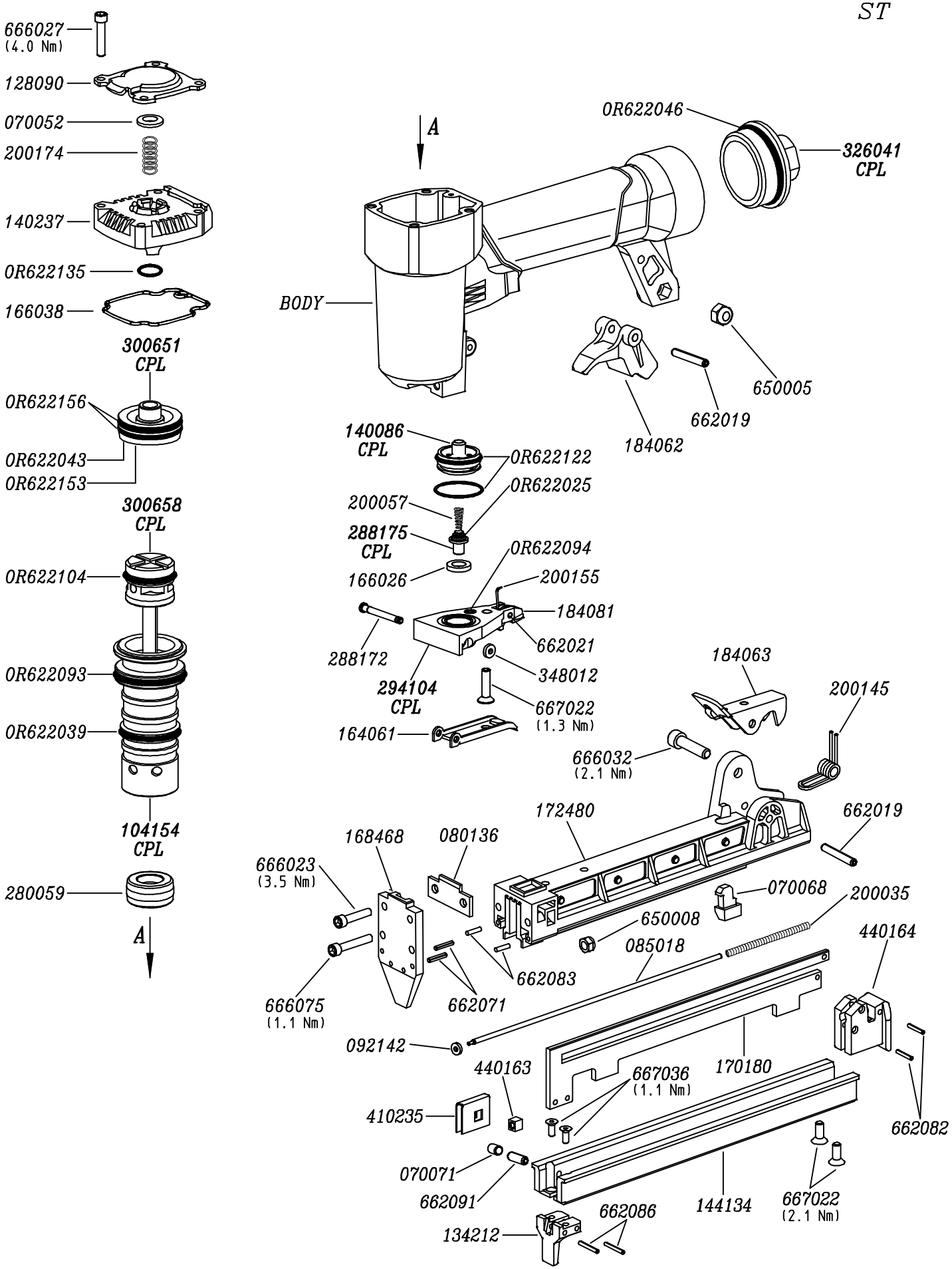
ST